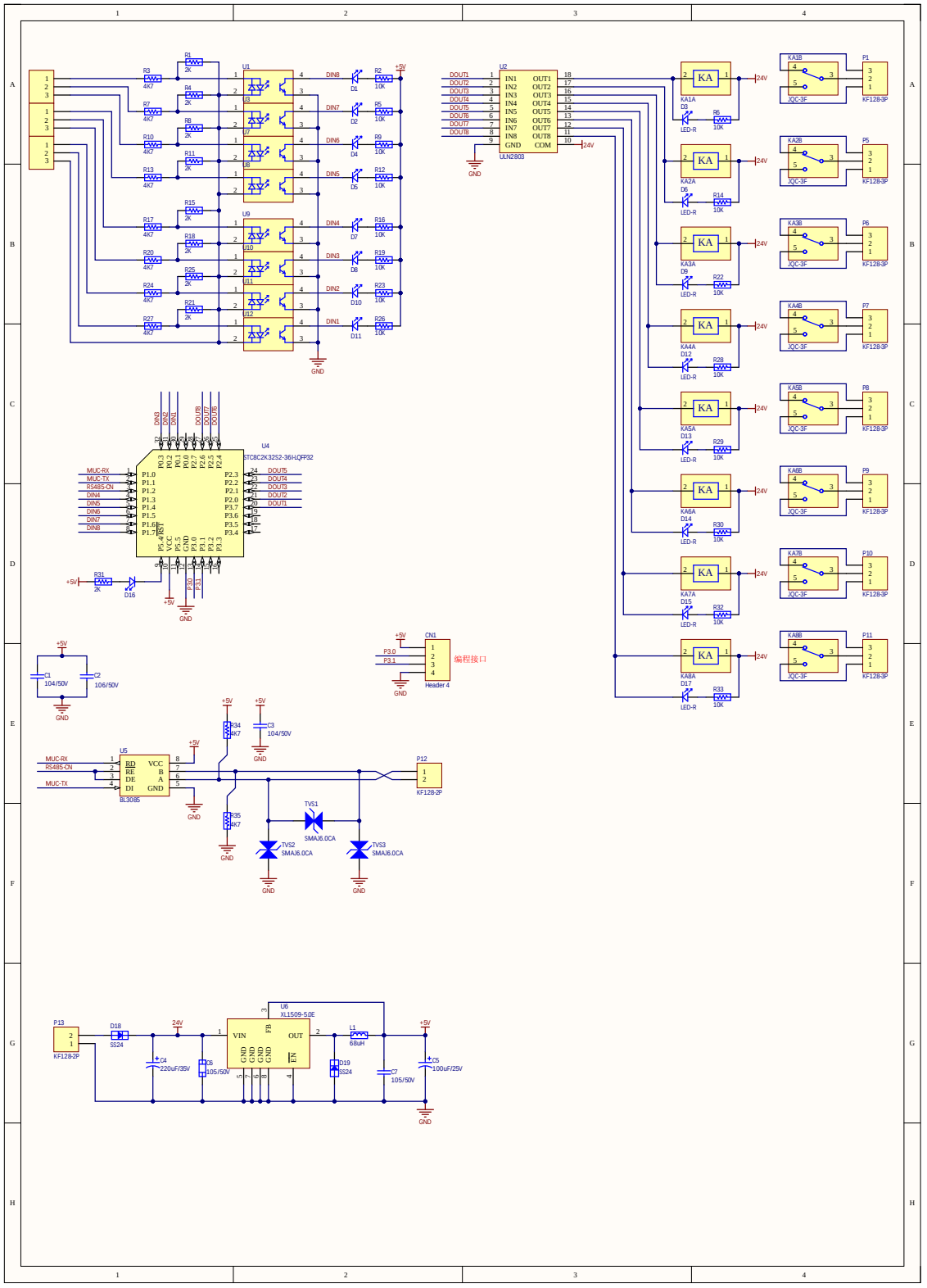

U1
U2
ULN2803
U4
STC8C2K32S2-36H-LQFP32
U5
BL3085
U6
XL1509-5.0E
CN1
Header 4
编程接口
P12
KF128-2P
P13
KF128-2P
TVS1
SMAJ6.0CA
TVS2
SMAJ6.0CA
TVS3
SMAJ6.0CA
KA1A
KA2A
KA3A
KA4A
KA5A
KA6A
KA7A
KA8A
KA1B
KA2B
KA3B
KA4B
KA5B
KA6B
KA7B
KA8B
JQC-3F
KF128-3P
LED-R
GND
+5V
24V